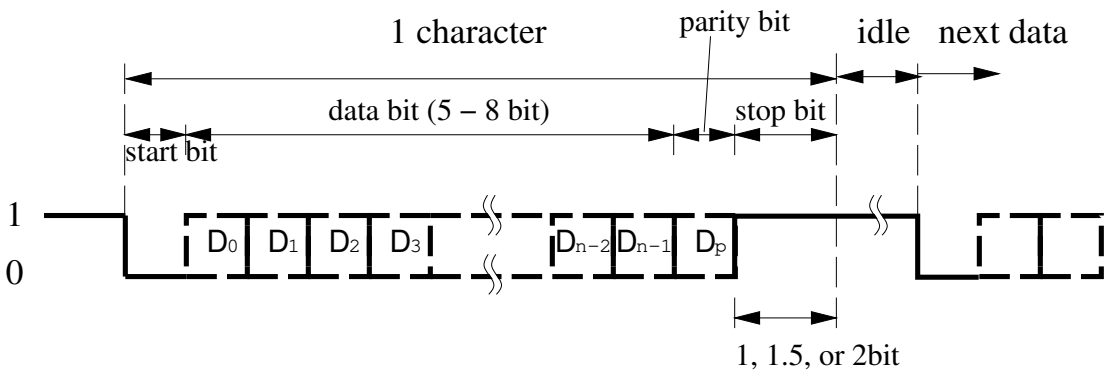
1 character
parity bit
idle
next data
data bit (5 – 8 bit)
stop bit
start bit
1
0
D0
D1
D2
D3
Dn-2
Dn-1
Dp
1, 1.5, or 2bit